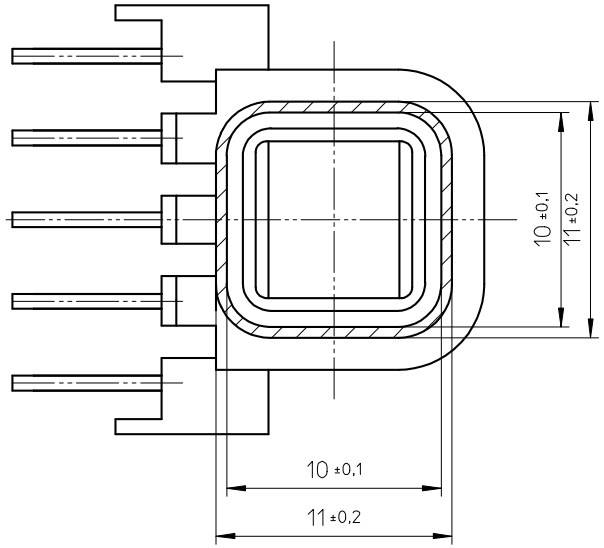

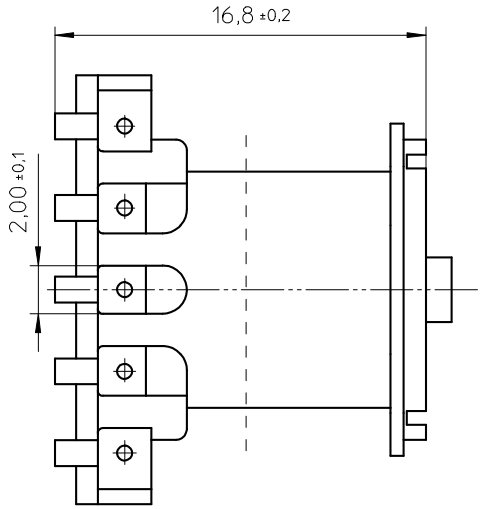

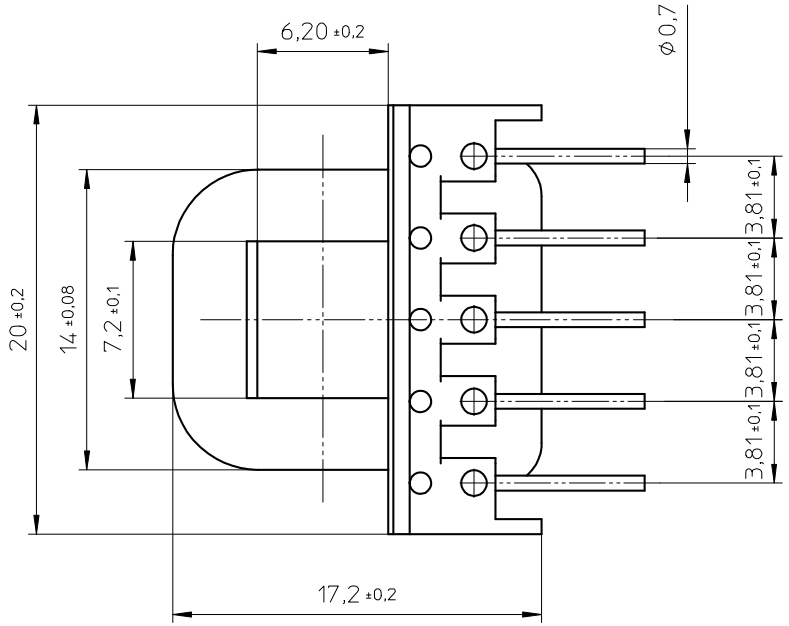

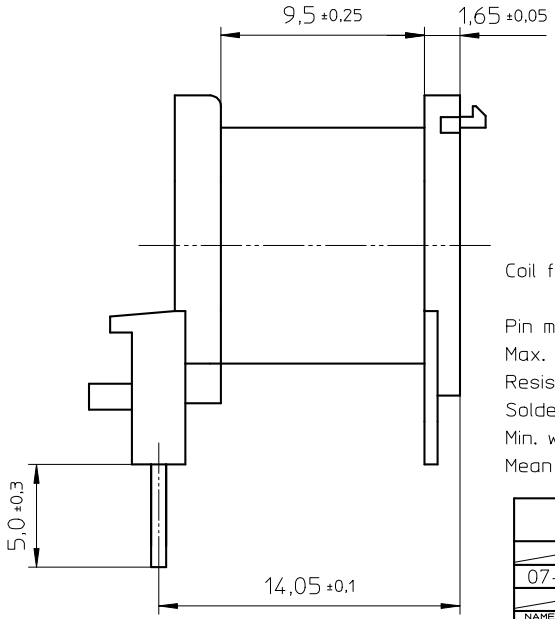

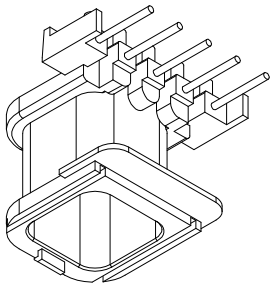

Coil former material:	Rynite FR530 (PET), glass-reinforced.
	UL file number: E41938 - UL94V-0.
Pin material:	Copper-plated steel wire, Sn plated.
Max. operating temp.:	acc. to IEC 60 085 class B, 130°C.
Resistance to soldering heat:	acc. to IEC 60 068-2-20 Part 2, Test Tb, method 1B, 350°C - 3,5sec.
Solderability:	acc. to IEC 60 068-2-20 Part 2, Test Ta, method 1, 235°C - 2sec.
Min. winding area:	13.1 mm ²
Mean length of turn:	50 mm.

CLASS.NO.	CPCO-E20/6-1S-5P-TZ	4322 021 06781	~~07-10-05~~
07-10-05			~~07-10-09~~
			~~07-10-11~~
			07-10-30
NAME NAAM A.Wojtasz	SUPERS. VERV.	001 SH BL. SH BL. 112 – 001 069	A3
MPA	CHECK CONTR.	DAT. 07-10-05	Property of Eigendom van © FERROXCUBE 2007

FERROXCUBE