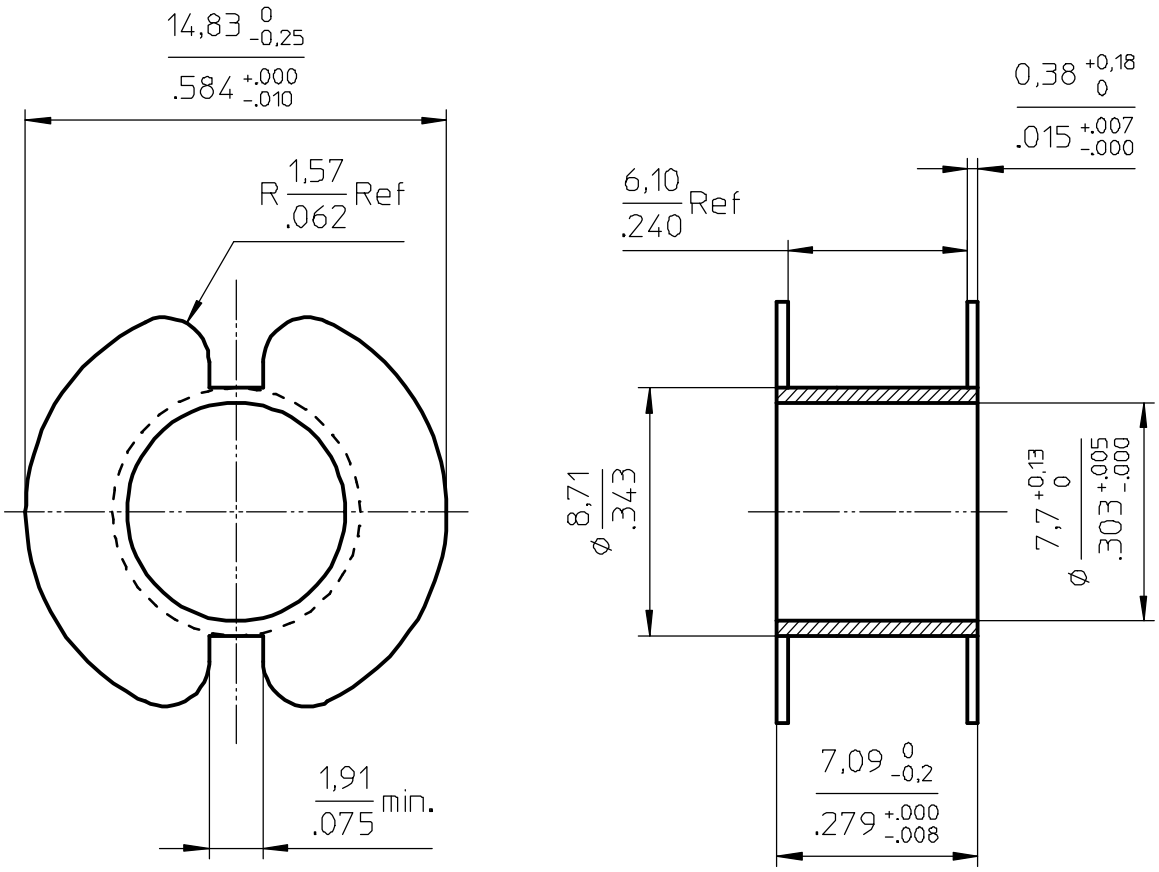

Coil former material: Delrin 900 (POM).
UL file number: E66288 - UL94HB.
mean length of turn: 1.5 inch
winding area: 0.029 sq inch

CP-P18/11-1S-A			4335 000 26071		01-06-01
					02-11-04
NAME NAAM	JON	SUPERS. VERV	1	SH BL SH BL 112 – 001	A4
MPA		CHECK CONTR.	DAT.	Property of Eigendom van	© FERROXCUBE 2002