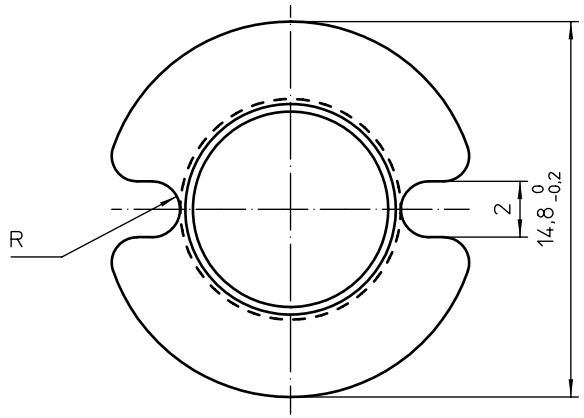

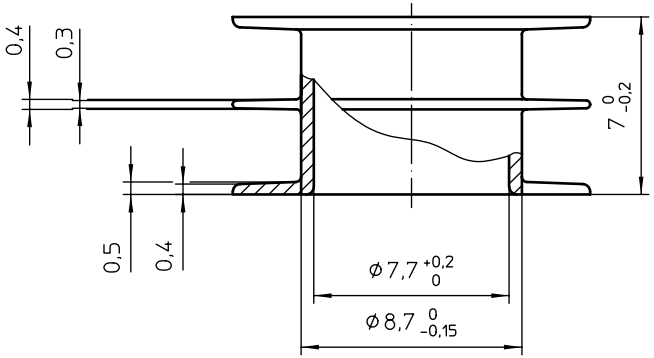

Coil former material:	Valox 420SEO (PBT), glass-reinforced. UL file number: E45329(R) - UL94V-0.
Max. operating temp.:	acc. to IEC 85 class F, 155°C.
Min. winding area:	15,9 mm².
Mean length of turn:	36,6 mm.

CLASS.NO.	CP-P18/11-2S	4322 021 02391	97-08-22 / 00-06-14
00-06-14			

NAME NAAM	M.Veekens	SUPERS. VERV.	4322 021 30282	1	SHEET BLAD	112 – 001	010	A4
MPA		CHECK CONTR.	DAT. 97-08-22	Property of Eigendom van	© FERROXCUBE 2000			