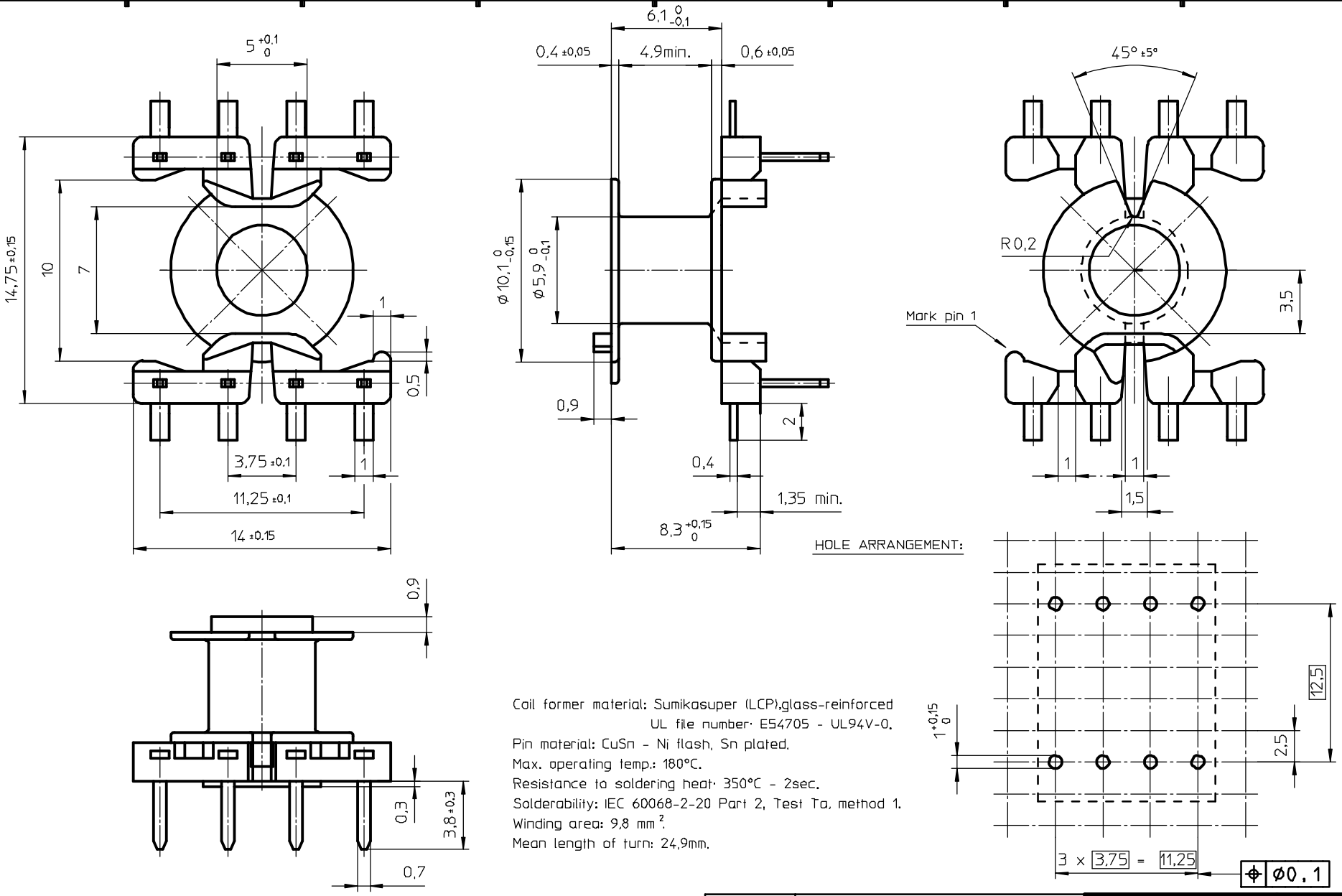

Coil former material: Sumikasuper (LCP),glass-reinforced
UL file number: E54705 - UL94V-0.
Pin material: CuSn - Ni flash, Sn plated.
Max. operating temp.: 180°C.
Resistance to soldering heat: 350°C - 2sec.
Solderability: IEC 60068-2-20 Part 2, Test Ta, method 1.
Winding area: 9,8 mm².
Mean length of turn: 24,9mm.

CLASS.NO.	CPV-RM5-1S-8PD-Z	4322 021 06211	03-02-25
NAME NAAM M.Veekens	SUPERS VERV.	001 SHEET BL. 112 - 001	069 A3
MPA	CHECK CONTR.	DAT. 03-02-25	Property of Eigendom van © FERROXCUBE 2000